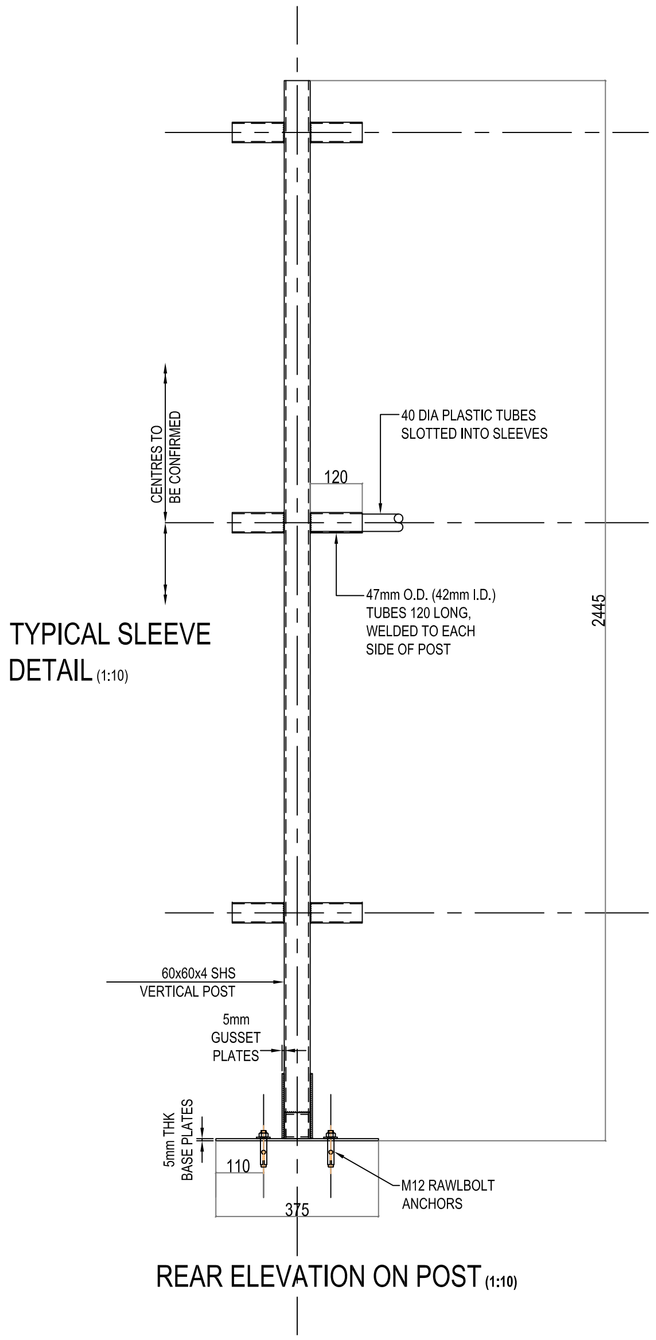

TYPICAL SLEEVE DETAIL (1:10)

REAR ELEVATION ON POST (1:10)

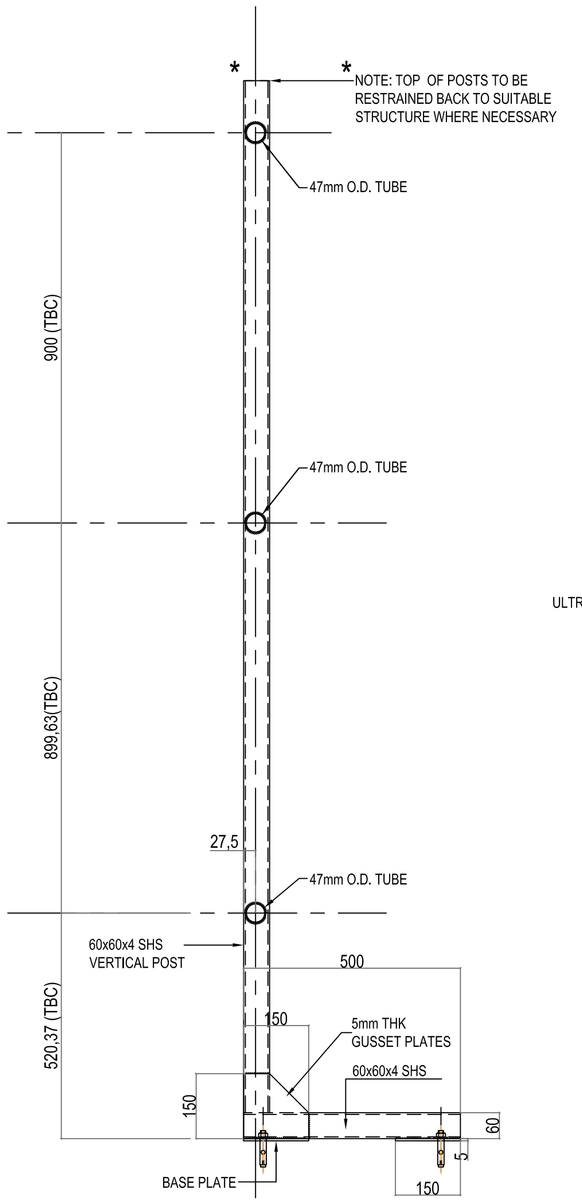

SIDE ELEVATION ON POST (COUNTER WEIGHTS OMITTED) (1:10)

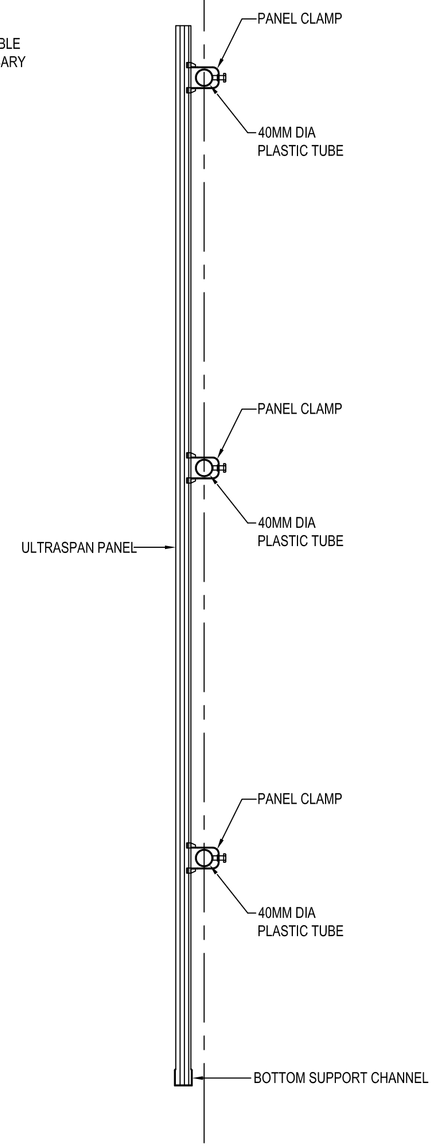

SECTION Y-Y THROUGH PANEL (1:10)

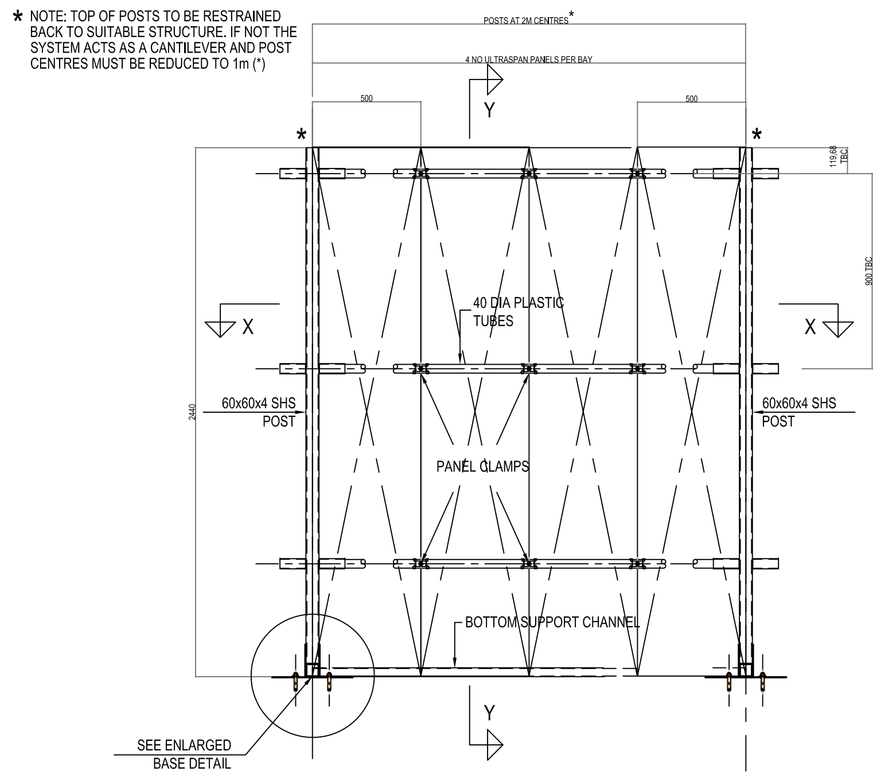

TYPICAL ARRANGEMENT (1:20)

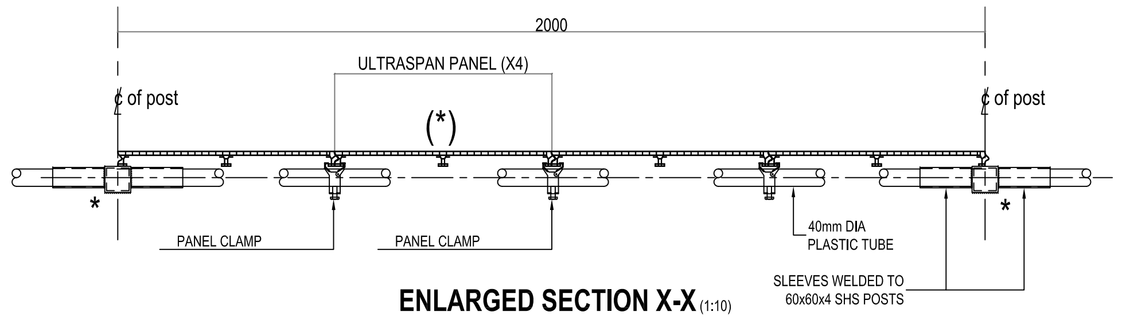

ENLARGED SECTION X-X (1:10)

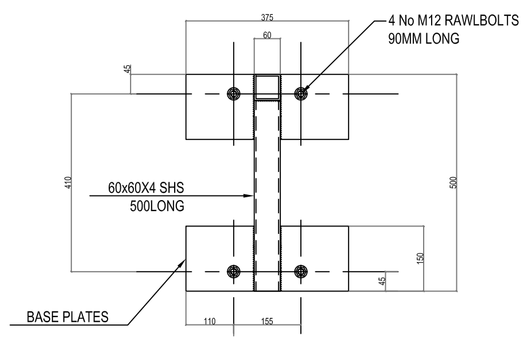

NOTE: BASE IS ASSUMED TO BE BOLTED DOWN TO A CONCRETE SLAB WITH A MINIMUM THICKNESS OF 120mm AND A CUBE STRENGTH OF 30N/mm2

TYPICAL POST BASE DETAIL - PLAN (1:10)

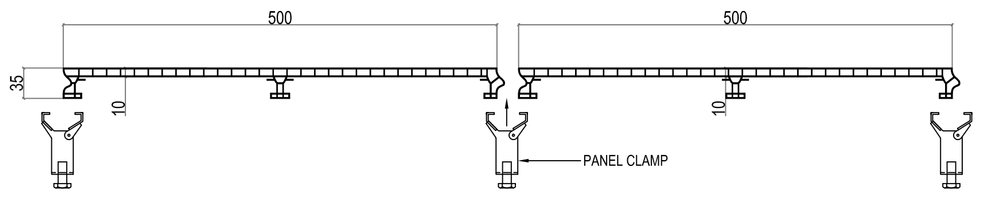

TYPICAL 10mm ULTRASPAN PANEL (4 NO PER 2m BAY) CROSS SECTION (1:5)

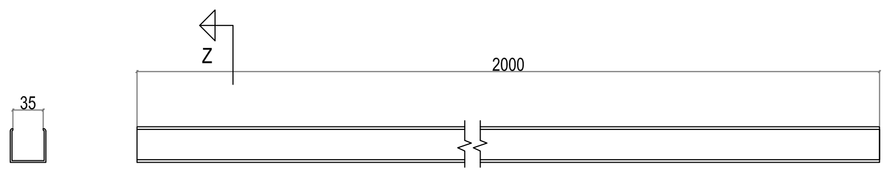

SECTION Z-Z (1:5)

BOTTOM SUPPORT CHANNEL - PLAN (1:5)

SYSTEM PROFILES - ULTRASPAN EXTRA (1:5)

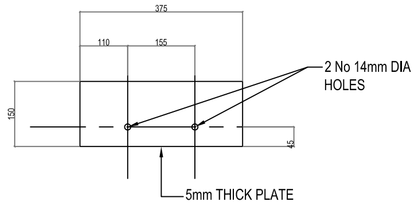

BASEPLATE DETAILS (2 NO PER POST) (1:10)

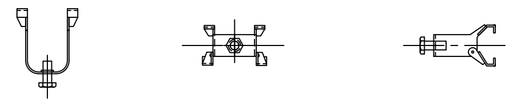

PLAN END ELEVATION SIDE ELEVATION

PANEL CLAMPS (1:5)

Kwik-klik

FAST FIT TEMPORARY HOARDING SYSTEMS

NOTES

* PLEASE CHECK FOR WIND FLOW CALCULATIONS. SITE & PROJECT SPECIFIC CALCULATIONS CAN BE PROVIDED ON REQUEST AT AN ADDITIONAL FEE.

MANAGED STATIONS MANUAL NR/L3/OCS/044 - R-11

Kwik-Klik *Ultraspan* offers unlimited scope to contractors who need to fit low-cost, large-scale temporary hoardings. The interlocking flat panels are easy to fit to a suitable sub-structure and there is no limit to the height or the overall surface area that can be covered by these panels.

Standard 10mm panels are available in 3m or 5m lengths and can be fitted horizontally or vertically to create an attractive customer facing facade. Each panel has a standard width of 0.5m. Corners can be shaped to maximise the useable store space and to accommodate immovable fittings.

This cost-effective system creates an immaculate finish. Available in a vast range of colours, Kwik-Klik *Ultraspan* can even provide a high value permanent store fitting solution. The smooth finish allows the promotional vinyls to be attached which is ideal in a retail environment.

Please call if you require technical details.

FLEXIBLE MODULAR SYSTEM - any height, any area, perfect corners, unlimited angles and flexibility.
EASY TO INSTALL - the modular system makes fitting easy.
RE-LOCATABLE - can be re-sited in the store, ideal if the refurb is in stages.
ATTRACTIVE - preserves and enhances the store's and managed areas within the station, aesthetic appearance .
ROBUST - high impact resistance, virtually indestructible, yet light to handle .
FOOD SAFE - wipe-dean smooth surfaces help maintain hygiene standards.
LIGHTWEIGHT - easy to deliver, easy to handle, easy to Install .
COLOUR OPTIONS - we can blend In and match the store's colour scheme
RELIABLE SERVICE - we respond quickly and professionally to your needs .
QUALITY MATERIALS - including Class 0 superior PVC.

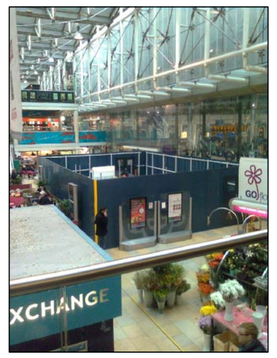

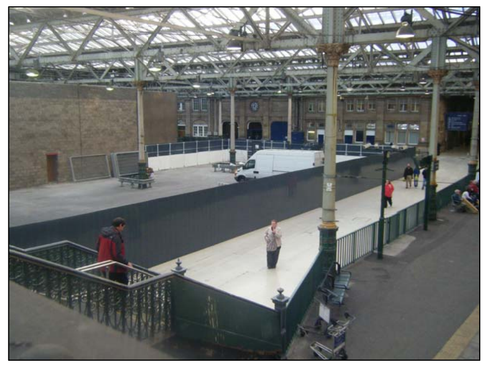

CLEANING STRATEGY FOR O&M MANUALS SEE CSO&M DATA SHEET. NBS Ref: Q40/430

Kwik-klik ultraspan extra

FLOOR TO CEILING SEALED SYSTEM

© Copyright 2011 Kwik-Klik Hoardings Ltd

Kwik-Klik Hoardings Ltd, Unit 3a, A1 Business Park, 370 Bradford Road, Brighouse, West Yorkshire, HD6 4DJ
Tel: 0845 058 4999
Fax: 01484 719 754
Email: info@kwik-klik.co.uk
www.kwik-klik.co.uk
www.ecogenik.co.uk

Product Range
MANAGED STATIONS MANUAL NR/L3/OCS/044 - R-11

Drawing Title
FREE STANDING FEET DETAILS

Drawing No.	Revision				
KKHS0100	-				
Drawing Scale	Size	Drawn by	Date	Chkd	Passed
AS SHOWN	A1	NS	july 2011	T	-